Digital Catalog

Start

nasa Electro

nasa Electro

About Us

Turbo Electromotor

Electromotor k30

Contact Us



About Us

Power. Silence. Durability.

Namavaran Arvin Industries at a Glance

Namavaran Arvin Industries (Ltd.), operating under the trade name Electro NASA, is proud to be recognized as the first manufacturer of kitchen hood electric motors in Iran.

Our motor manufacturing activities began in 1999 as a sole proprietorship and have continued since 2007 under the legal entity of Namavaran Arvin Industries.

Today, the company is one of the pioneers in the manufacturing of a wide range of kitchen hood electric motors in Iran, and is recognized as one of the leading manufacturers in the Iranian market in terms of product variety and motor solutions.

At Namavaran Arvin Industries, our core principle is to deliver the highest quality at the best possible price. Our commitment to product quality and customer satisfaction is supported by a 24-month unconditional warranty and a 5-year warranty, demonstrating our confidence in the reliability and durability of our products.

A Lasting Name in the Electric Motor Industry

Our R&D department continuously develops new electric motor models based on customer needs.

In addition to complying with national standards, we manufacture customized motors according to each manufacturer's specific requirements.

With a strong presence in the domestic market, we have contributed to reducing imports and foreign currency expenditure. Today, in compliance with international standards, we export our products directly to international markets, while more than ٪30 of our products are indirectly exported through complete kitchen hood systems.



Turbo Electromotor

Turbo electric motors feature an optimized design, high airflow, higher efficiency, low energy consumption, and exceptionally low vibration and noise, making them an ideal choice for a wide range of kitchen hoods.

Available in various configurations, including different cover types, shaft options, and speed settings, these motors offer bidirectional rotation, a 200°C thermal class, and a thermal protector (Thermoguard) for safe and reliable operation.

They are also compatible with various switches and suitable for installation in modern kitchen hoods.

Electromotors

nasa Electro

Turbo Electromotor (Double-Cover Design)

Metal Cover(2115)

Suitable for Various Kitchen Hoods
Compatible with Metal Silent Models

Silent & Super-Silent Operation
High-Quality Motor with Low Noise

Optimal Airflow Performance
Rapid Air Exhaust with Two Forward-Curved Impellers

Durable Galvanized Steel Housing
Weld- and Rivet-Free Assembly



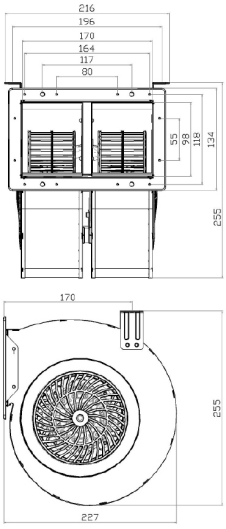

Easy Installation | Low Noise | Low Power Consumption | Compatible with Various Switches

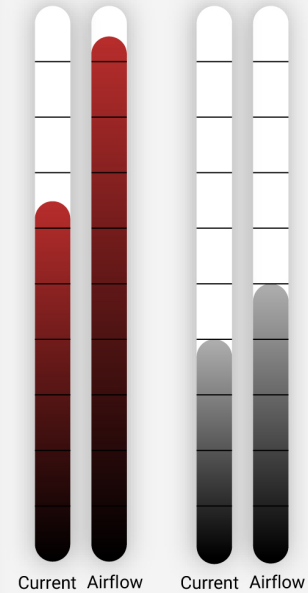

Technical Specifications

Voltage	240 V to 220 V
Frequency	60 Hz to 50 Hz
Motor Type	Single-Phase AC
Motor Speed	Speeds 1–8
Housing Material	Galvanized Steel
Insulation Class	200
Thermal Protector	Yes
Number of Impellers	2
Impeller Type	Forward
Capacitor	Yes

nasa Electro

Turbo Electromotor (Double-Shaft)

Metal Cover(2113)



Suitable for Various Kitchen Hoods
Compatible with Metal Silent Models

Silent & Super-Silent Operation
High-Quality Motor with Low Noise

Optimal Airflow Performance
Equipped with Two Forward-Curved Impellers

Durable Galvanized Steel Housing
Weld-Free Assembly

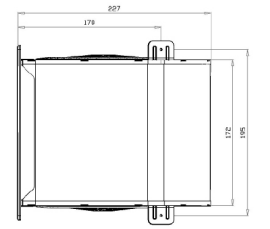

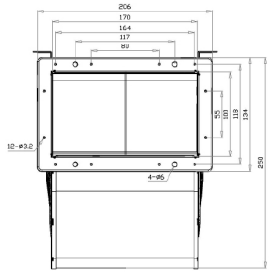

Easy Installation | Low Noise | Low Power Consumption | Compatible with Various Switches

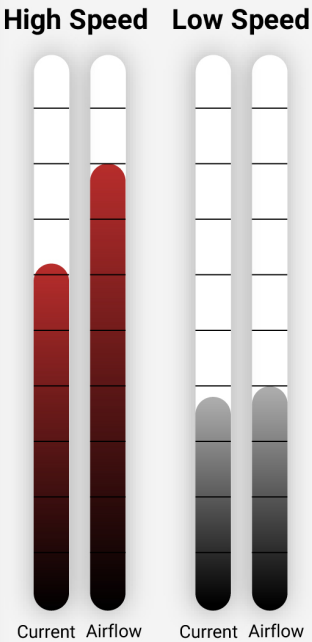

Technical Specifications

Voltage	240 V to 220 V
Frequency	60 Hz to 50 Hz
Motor Type	Single-Phase AC
Motor Speed	Speeds 1–8
Housing Material	Galvanized Steel
Insulation Class	200
Thermal Protector	Yes
Number of Impellers	2
Impeller Type	Forward
Capacitor	Yes

nasa Electro

Turbo Electromotor

Plastic Cover(2112)

Suitable for Various Kitchen Hoods
Compatible with Various Models, Including Classic Series

Reliable Performance & Long Service Life
High Quality & Low Noise

Optimal Airflow Performance
Equipped with a Forward-Curved Impeller

Durable Plastic Housing
Precision Assembly



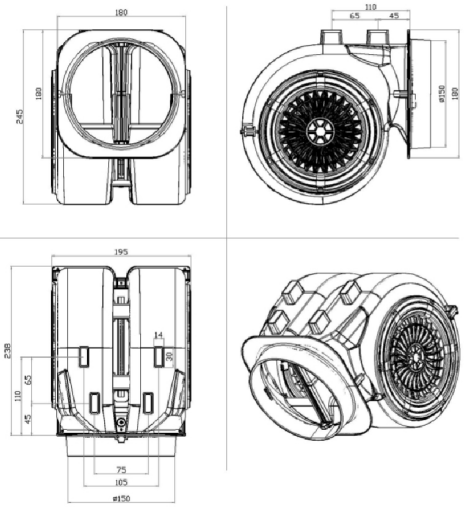

Easy Installation | Low Noise | Low Power Consumption | Compatible with Various Switches

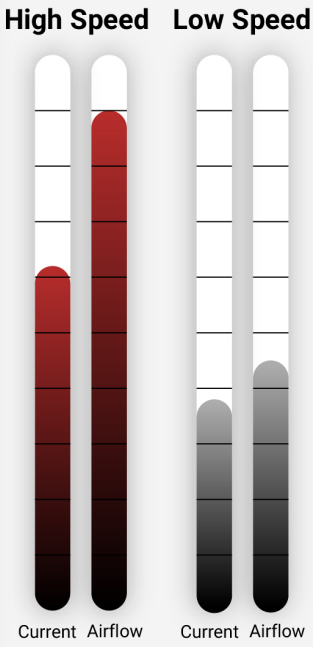

Voltage	240 V to 220 V
Frequency	60 Hz to 50 Hz
Motor Type	Single-Phase AC
Motor Speed	Speeds 1–8
Housing Material	Flame-Retardant Plastic
Insulation Class	200
Thermal Protector	Yes
Number of Impellers	2
Impeller Type	Forward
Capacitor	Yes

nasa Electro

Turbo Electromotor (Single-Shaft)

Metal Cover(2120/2114)



Suitable for Various Kitchen Hoods
Compatible with Concealed Hood Models

Silent Operation
Low Vibration & Low Noise

Optimal Airflow Performance
Equipped with a Forward-Curved Impeller

Galvanized Steel Housing
Weld- and Rivet-Free Assembly

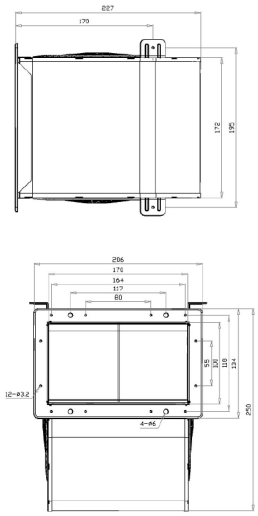

Easy Installation | Low Noise | Low Power Consumption | Compatible with Various Switches

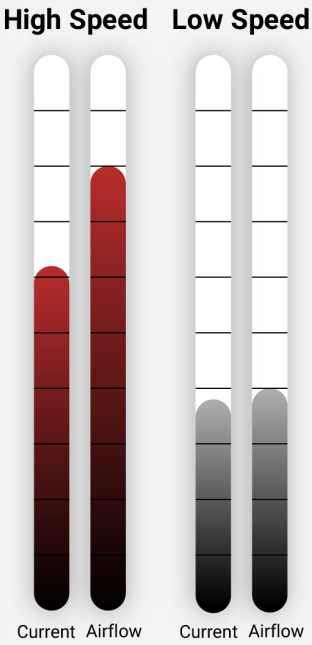

Technical Specifications

Voltage	240 V to 220 V
Frequency	60 Hz to 50 Hz
Motor Type	Single-Phase AC
Motor Speed	Speeds 1–8
Housing Material	Galvanized Steel
Insulation Class	200
Thermal Protector	Yes
Number of Impellers	1
Impeller Type	Forward
Capacitor	Yes



Electromotor k30

The K30 electric motor is a reliable and widely used motor in the kitchen hood industry. It features a copper-wire starter and is available in various speed configurations.

The motor is offered with plastic or metal housings and operates at 220 V, 60–50 Hz, with CW and CCW rotation and a maximum current of 0.8 A. All models are equipped with a thermal protector (Thermoguard).

With its cost-effective design, reliable durability, and good resistance to overheating, the K30 remains a practical and widely used choice for kitchen hood applications.

Electromotors

nasa Electro

Electromotor k30

Plastic Cover(1115/1111)



Suitable for Various Kitchen Hoods
Compatible with Various Models

Reliable Performance & Long Service Life
High Quality & Low Noise

Optimal Airflow Performance
Equipped with a Backward-Curved Impeller

Durable Plastic Housing
Needle-Flame Test Certified

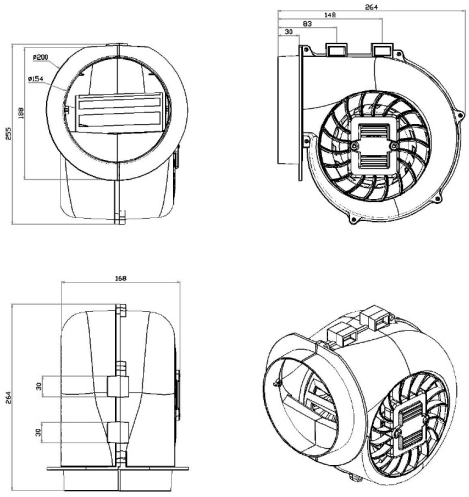

Easy Installation | Low Noise | Low Power Consumption | Compatible with Various Switches

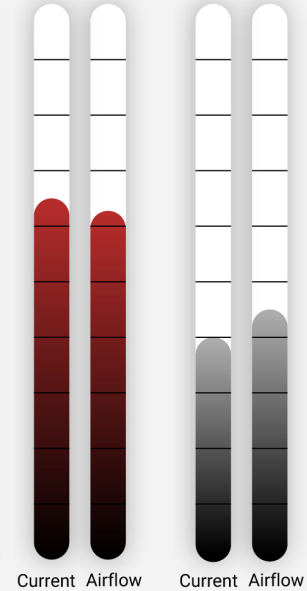

Technical Specifications

Voltage	240 V to 220 V
Frequency	60 Hz to 50 Hz
Motor Type	Single-Phase AC
Motor Speed	Speeds 1–5
Housing Material	Flame-Retardant Plastic
Insulation Class	180
Thermal Protector	Yes
Number of Impellers	1
Impeller Type	Backward
Capacitor	No

nasa Electro

Electromotor k30

Metal Cover(1117/1113)



Suitable for Various Kitchen Hoods
Compatible with Various Models

Reliable Performance & Long Service Life
High-Quality Electric Motor

Optimal Airflow Performance
Backward-Curved Impeller

Durable & Stylish Galvanized Steel Housing
Precision Assembly

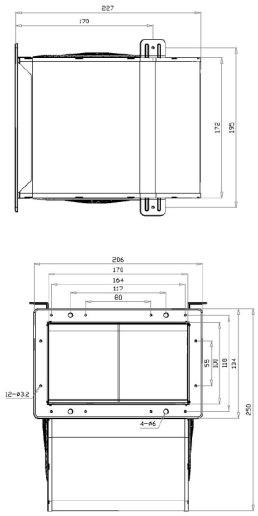

Easy Installation | Low Noise | Low Power Consumption | Compatible with Various Switches

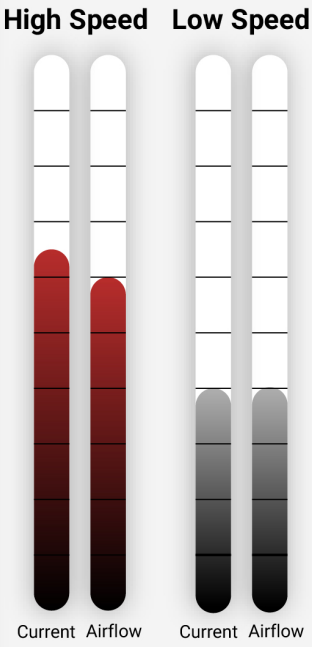

Technical Specifications

Voltage	240 V to 220 V
Frequency	60 Hz to 50 Hz
Motor Type	Single-Phase AC
Motor Speed	Speeds 1–5
Housing Material	Galvanized Steel
Insulation Class	180
Thermal Protector	Yes
Number of Impellers	1
Impeller Type	Backward
Capacitor	No

nasa Electro

Electromotor k30

Plastic Cover(3111/3112)

Suitable for Various Kitchen Hoods
Compatible with Various Concealed and Specialty Models

Compact Design
High Airflow

Reliable Performance & Long Service Life
Compatible with Carbon Filters

High Airflow Performance
Forward-Curved Impeller

Durable Plastic Housing
Precision Assembly



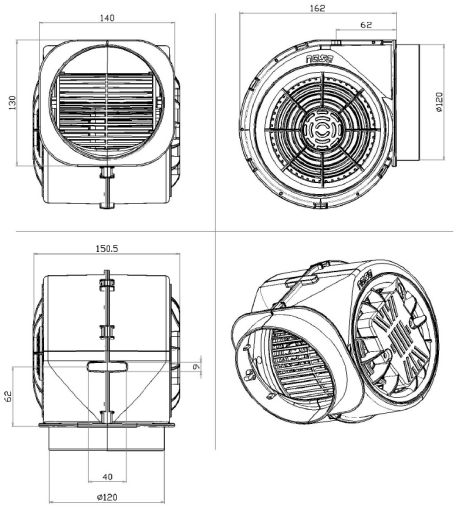

Easy Installation | Low Noise | Low Power Consumption | Compatible with Various Switches

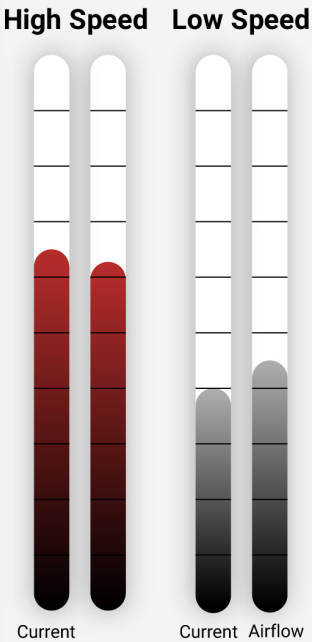

Technical Specifications

Voltage	240 V to 220 V
Frequency	60 Hz to 50 Hz
Motor Type	Single-Phase AC
Motor Speed	Speeds 1–5
Housing Material	Flame-Retardant Plastic
Insulation Class	180
Thermal Protector	Yes
Number of Impellers	1
Impeller Type	Forward
Capacitor	No

Contact Us

Semnan, East Industrial Park,
Jomhouri Boulevard, Sanat Street, Sanat ۲ Street

023 - 33653680 - 2

www.sanayearvin.ir

Postal Code: 3535169895

nasa Electro

POWER . SILENCE . DURABILITY